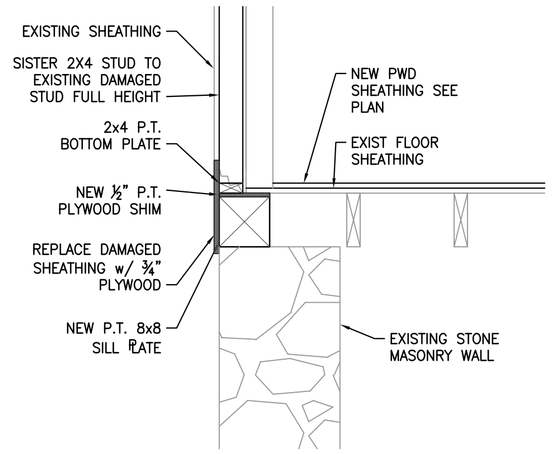

4 SECTION
SCALE: 3/4" = 1'-0"

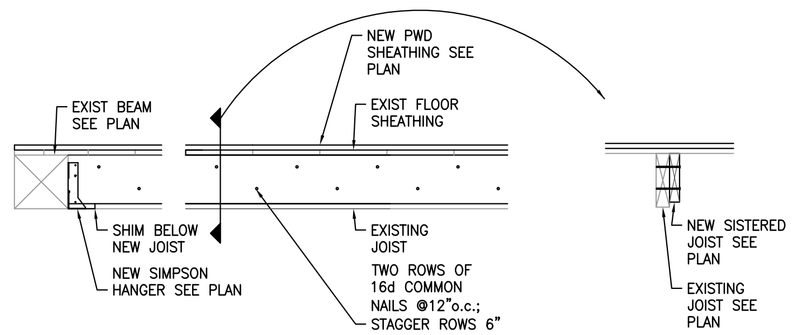

3 TYP SISTERED JOIST
SCALE: 3/4" = 1'-0"

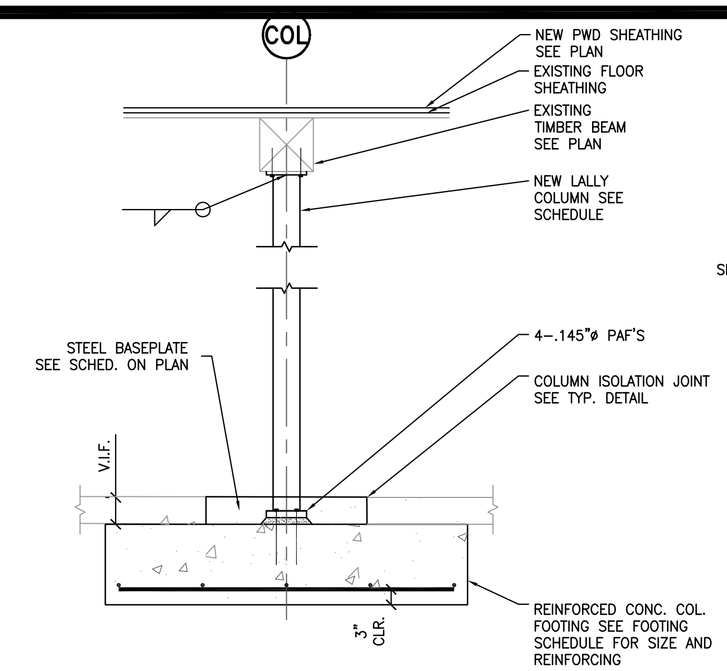

2 TYP. INTERIOR FOOTING SECTION
SCALE: 3/4" = 1'-0"

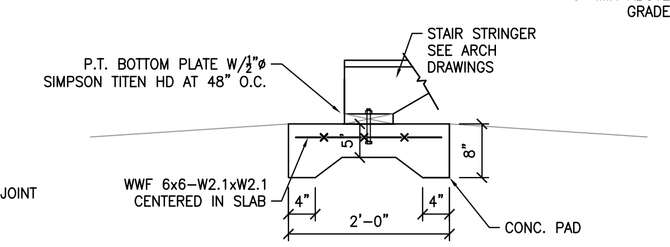

1A SECTION
3/4"=1'-0"

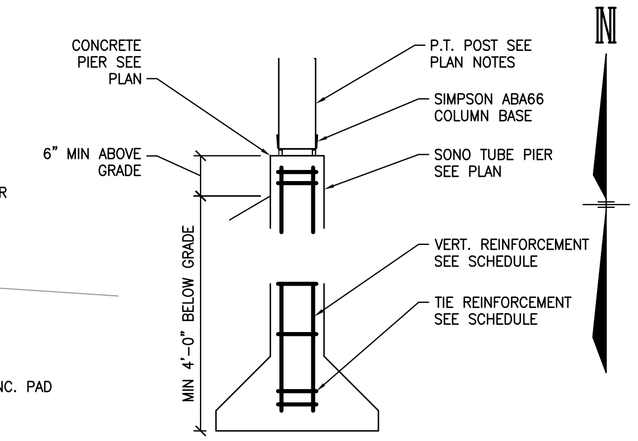

1 SECTION
3/4"=1'-0"

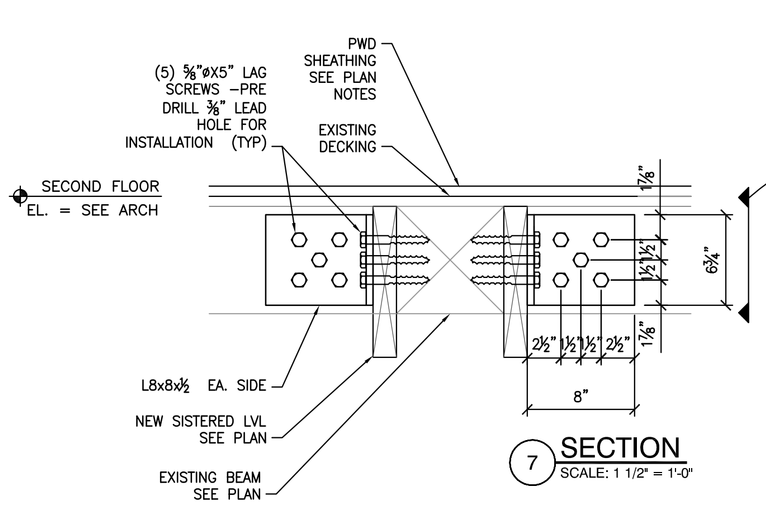

7 SECTION
SCALE: 1 1/2" = 1'-0"

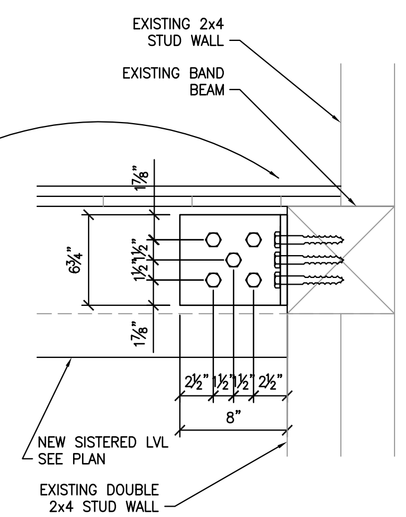

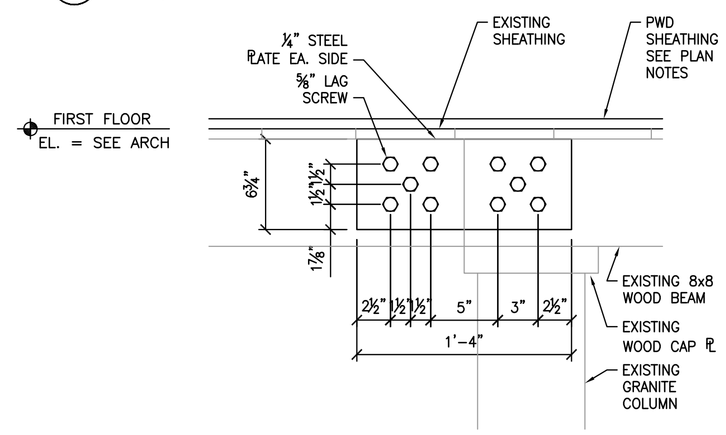

6 SECTION
SCALE: 1 1/2" = 1'-0"

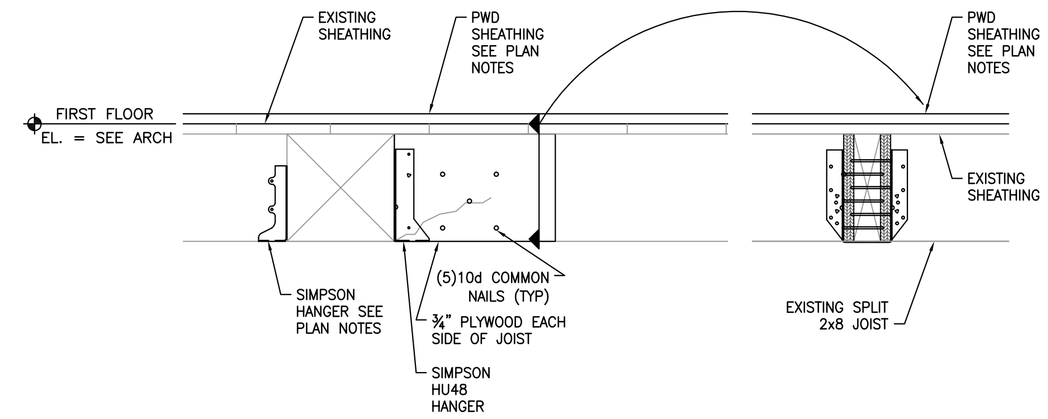

5 SECTION
SCALE: 1 1/2" = 1'-0"

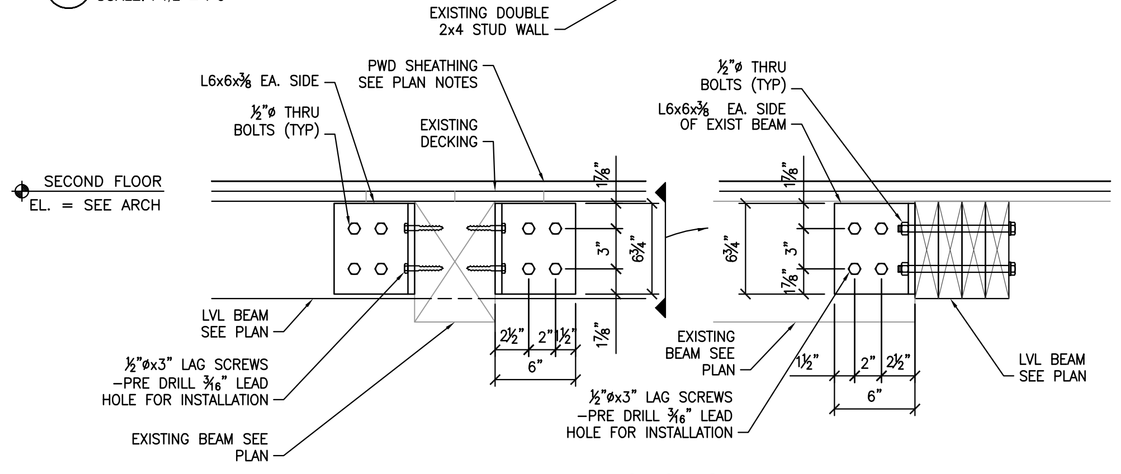

9 SECTION
SCALE: 1 1/2" = 1'-0"

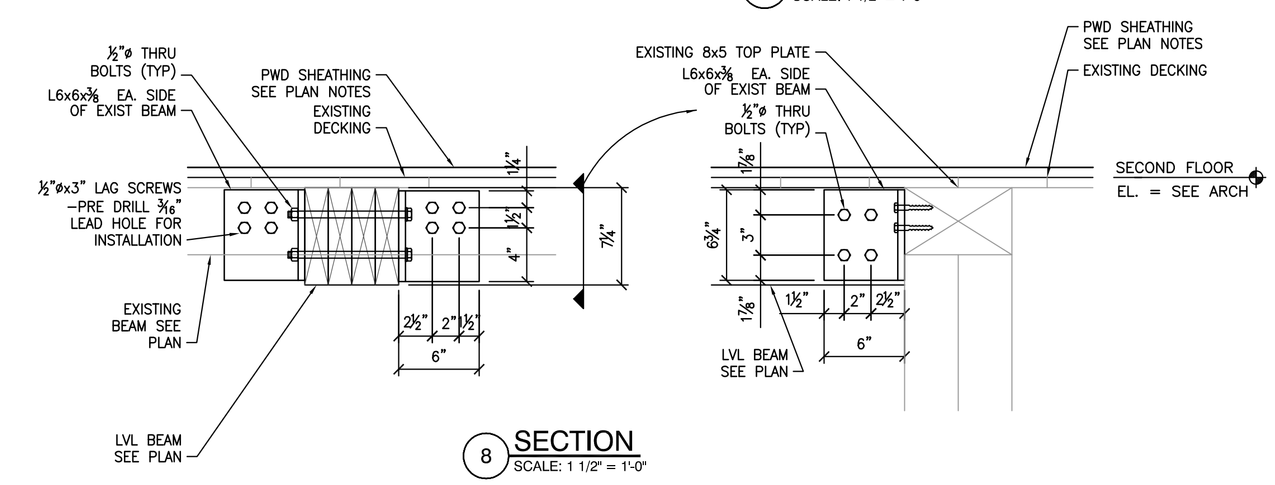

8 SECTION
SCALE: 1 1/2" = 1'-0"

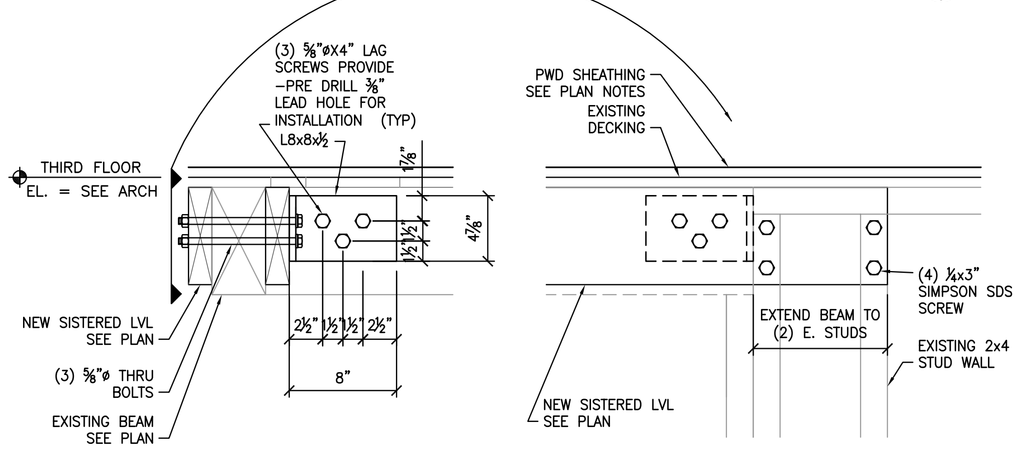

13 SECTION
SCALE: 1 1/2" = 1'-0"

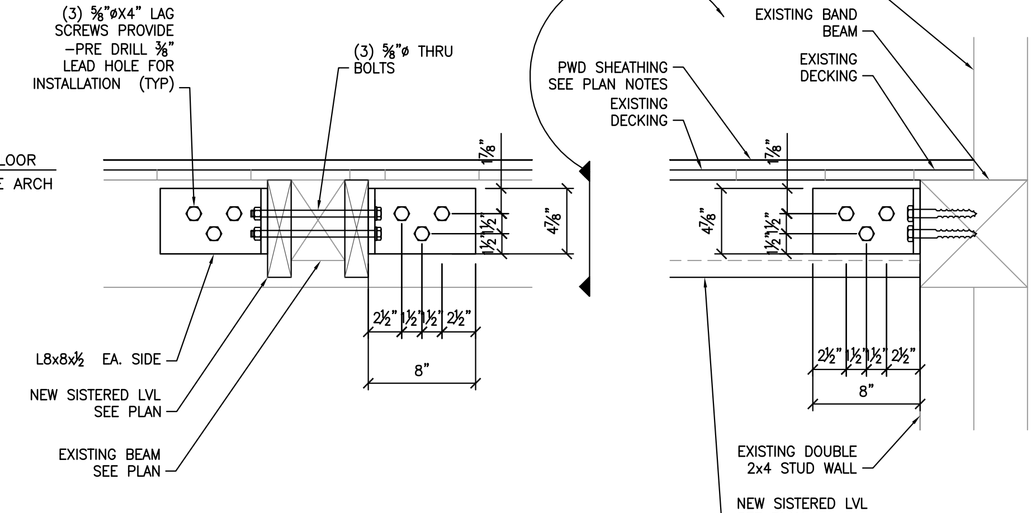

12 SECTION
SCALE: 1 1/2" = 1'-0"

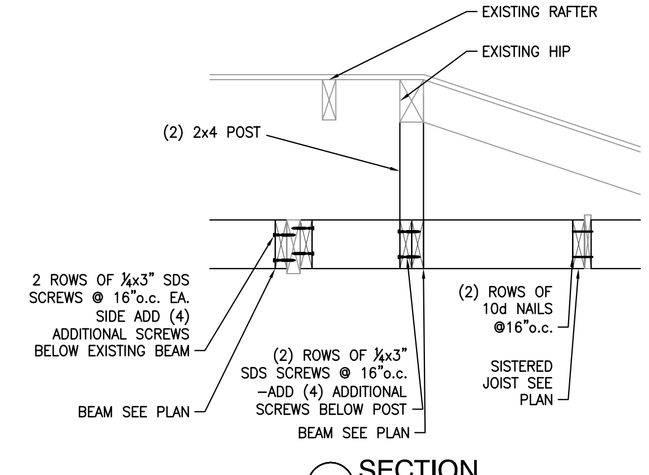

11 SECTION
SCALE: 3/4" = 1'-0"

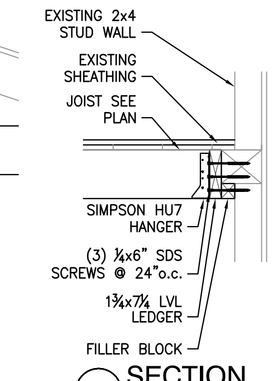

10 SECTION
SCALE: 3/4" = 1'-0"

Copyright 2010 © Thomas F. Moran, Inc.
48 Constitution Drive, Bedford, N.H. 03110

All rights reserved. These plans and materials may not be copied, duplicated, replicated or otherwise reproduced in any form whatsoever without the prior written permission of Thomas F. Moran, Inc.

This plan is not effective unless signed by a duly authorized officer of Thomas F. Moran, Inc.

48 Constitution Drive
Bedford, NH 03110
Phone (603) 472-4488
Fax (603) 472-9747
www.tfmoran.com

TFM Structural Engineers

REV.	DATE	DESCRIPTION	DR	CK
1				
2				
3				
4				
5				
6				
7				
8				
9				
10				

COMMUNITY TEAMWORK, INC.
360 PAWTUCKET STREET
LOWELL, MA
PREPARED FOR
J. FERRARA ASSOCIATES, INC.
57 ROLLSTONE RD.
FITCHBURGE, MA

SCALE: AS SHOWN **FEBRUARY 2 2010**

CADFILE	–
DR TEL	CK PES
FILE	31217.00

STRUCTURAL DETAILS

S3.0

P:\TFM Projects\xxxxx.xx Ferrara- cti-lowell mo\Working Dwgs\CTI struct drawings.dwg